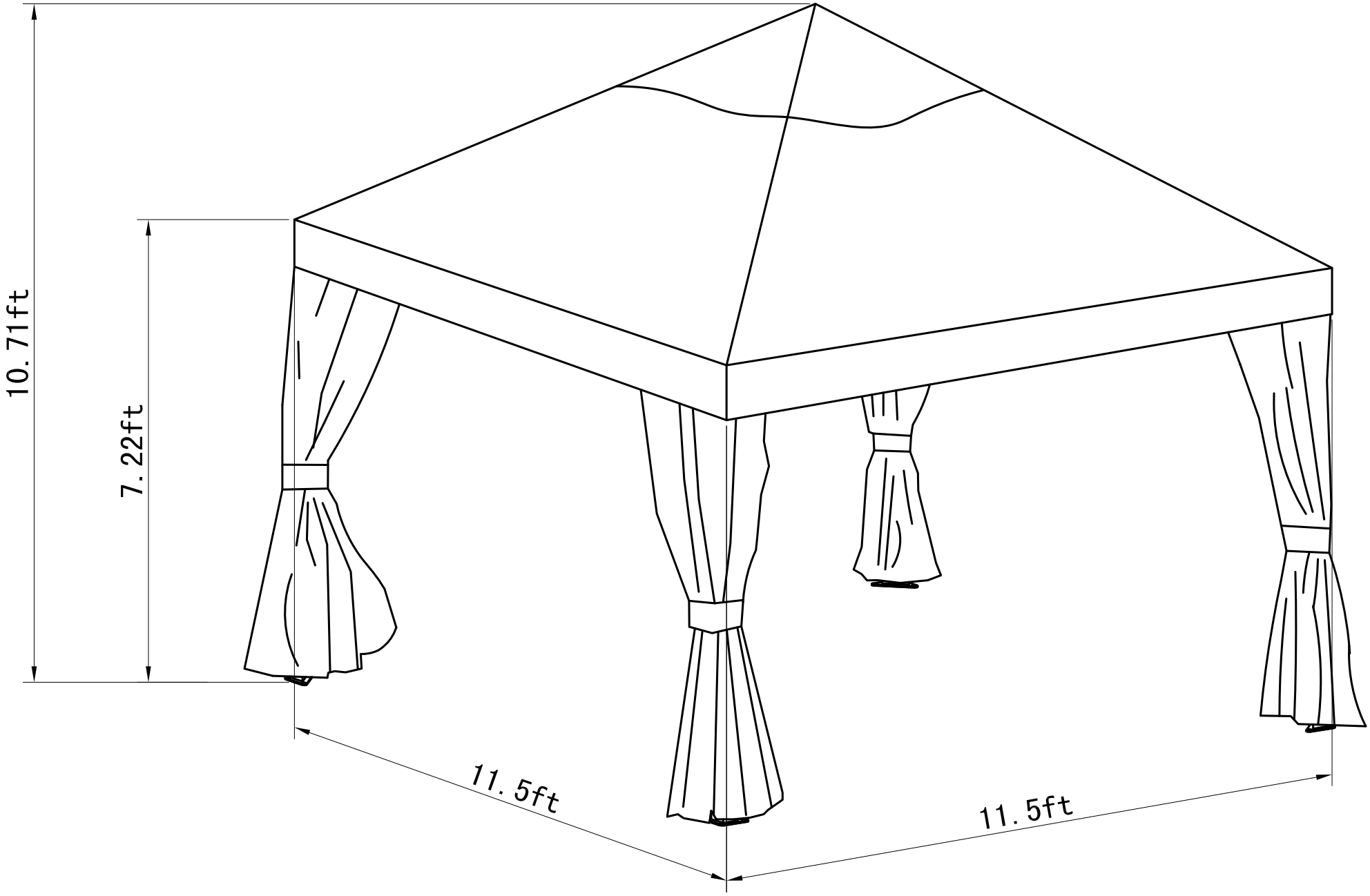
10.71ft
7.22ft
11.5ft
11.5ft

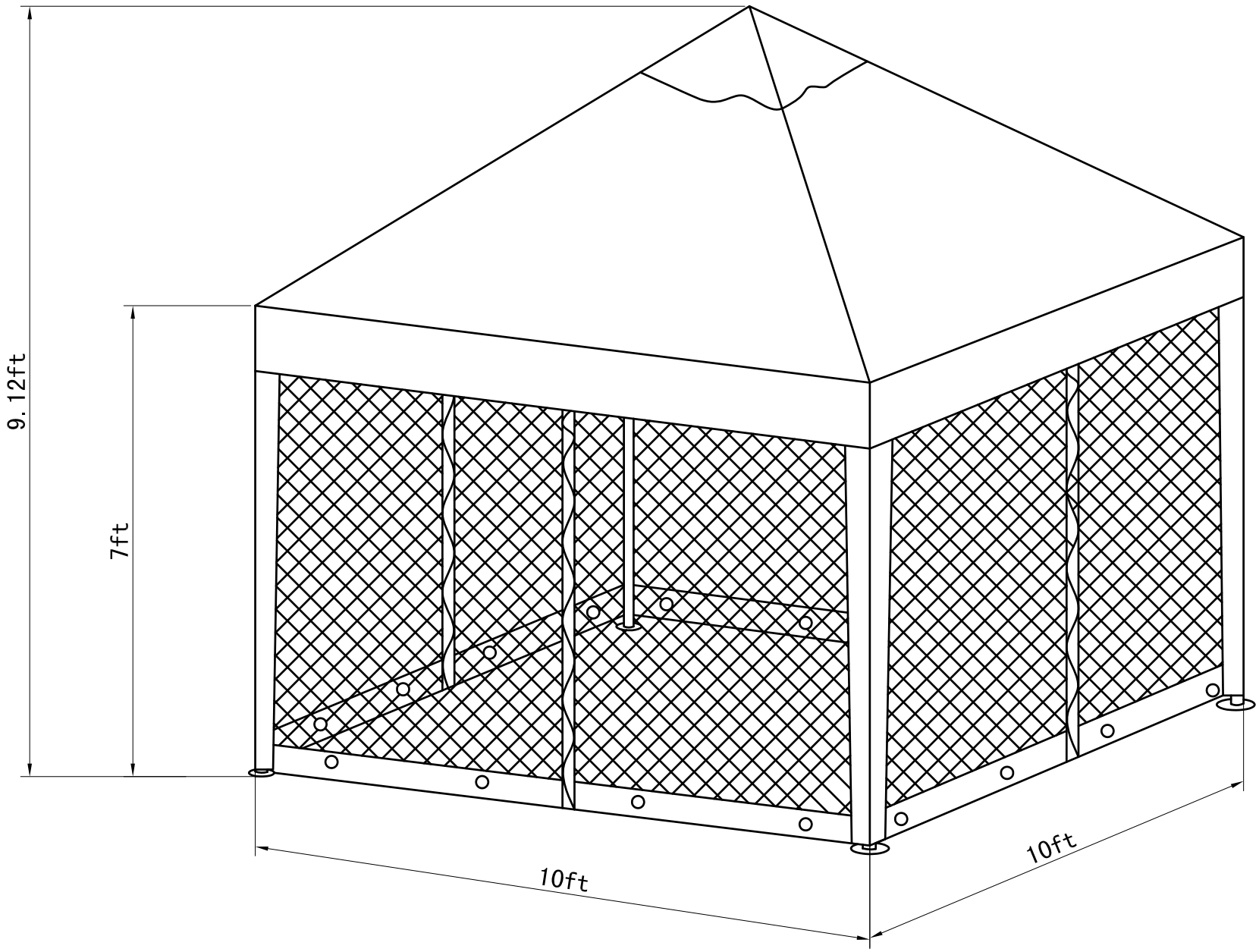
9.12ft
7ft
10ft
10ft

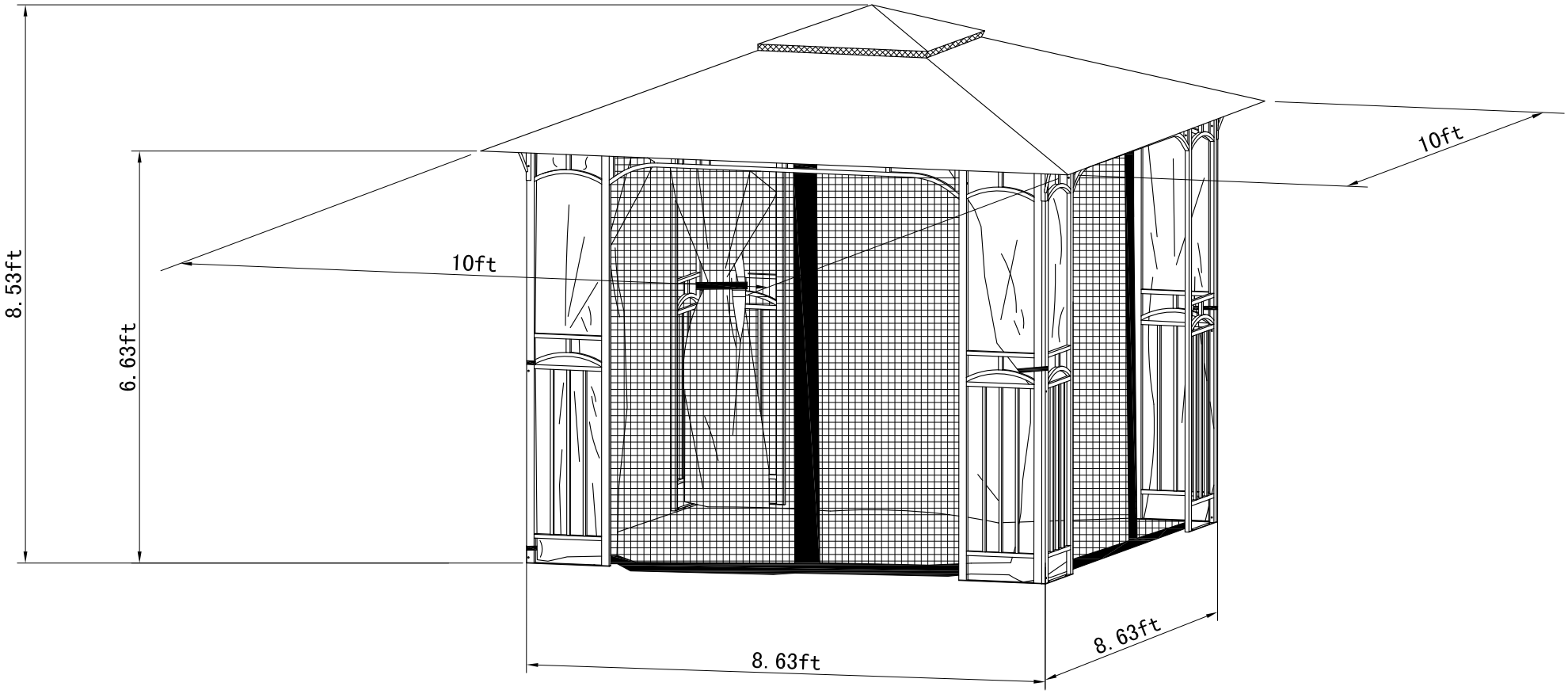
8.53ft
6.63ft
10ft
10ft
8.63ft
8.63ft

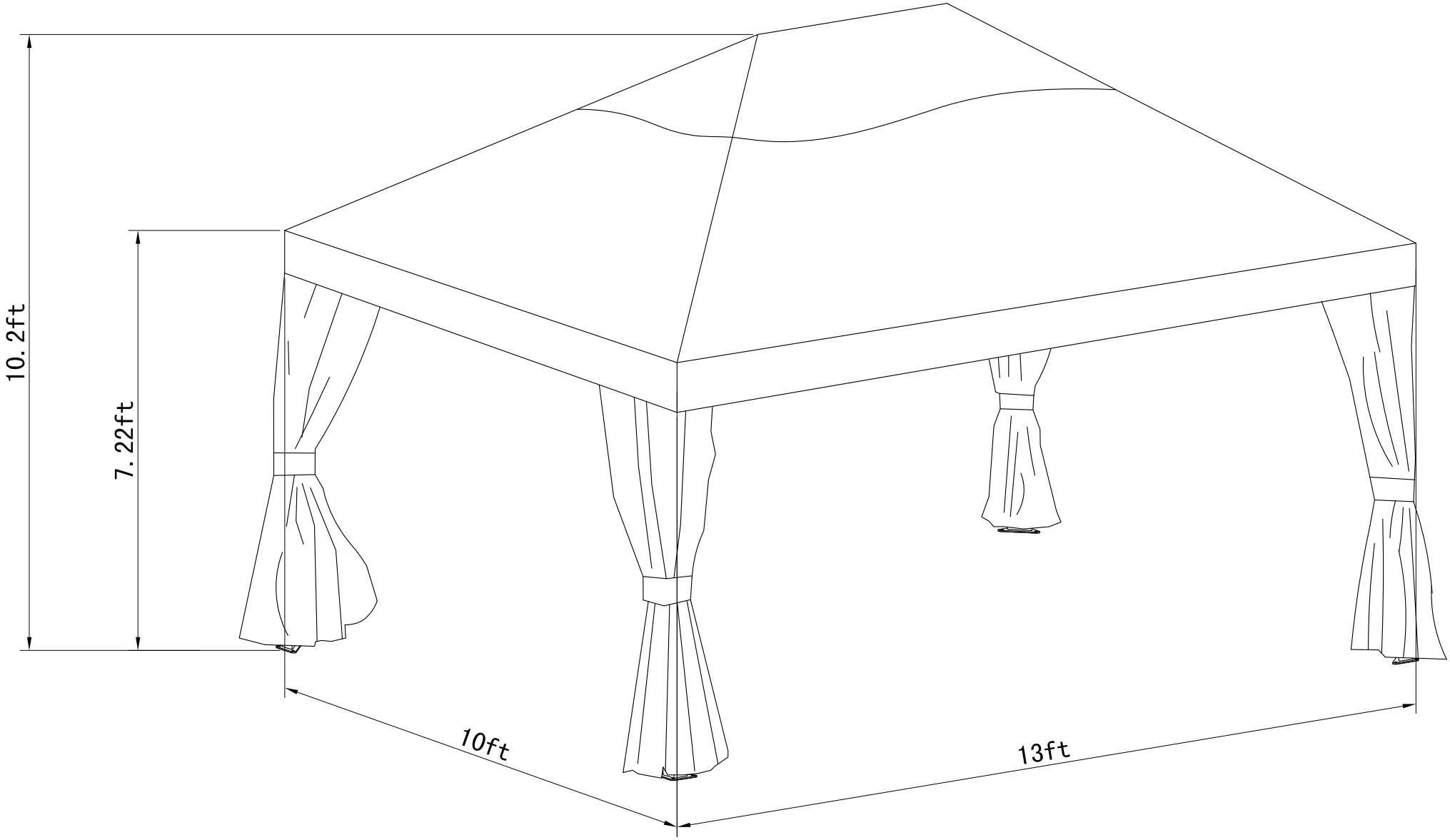
10. 2ft
7. 22ft
10ft
13ft

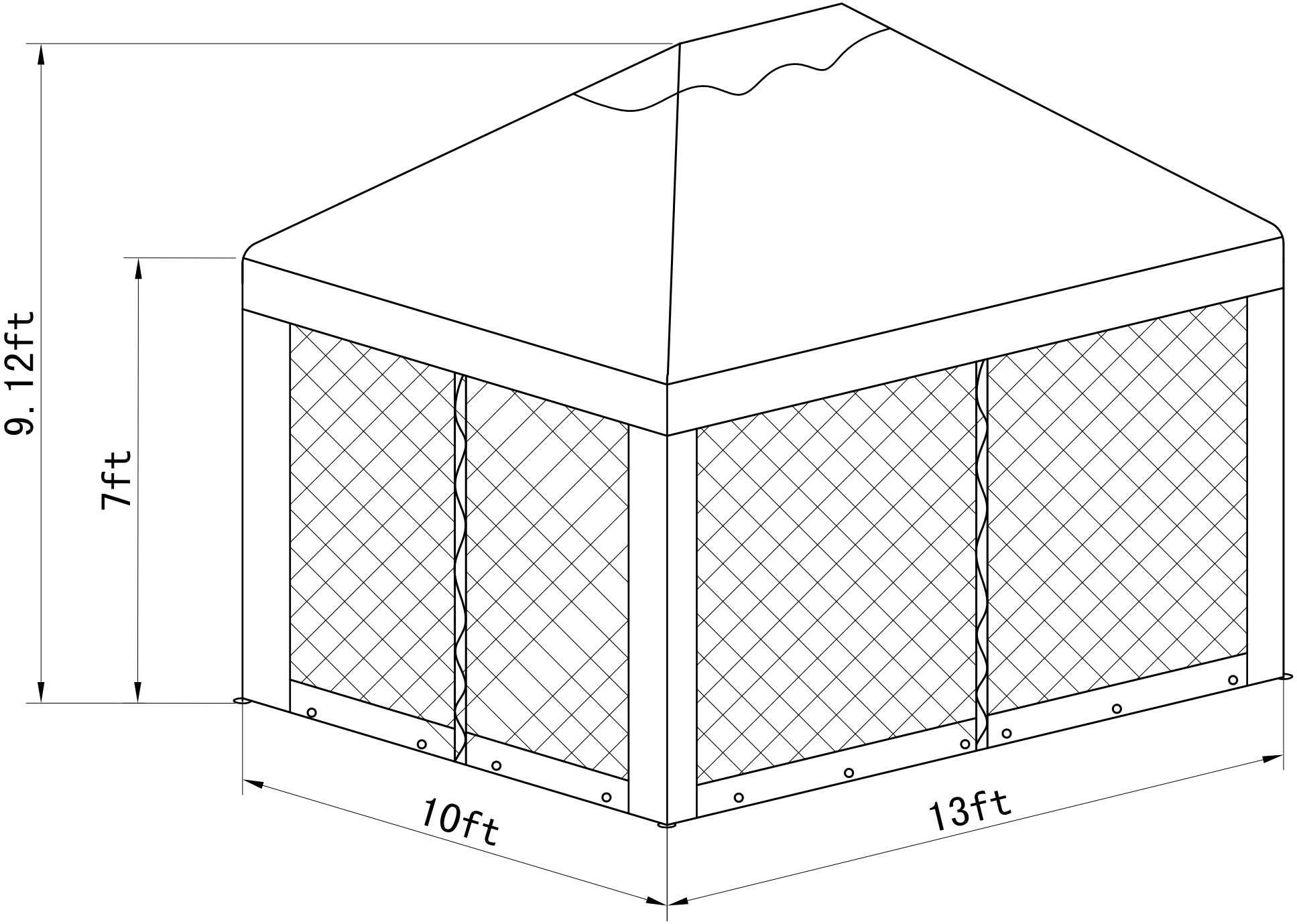
9. 12ft
7ft
10ft
13ft

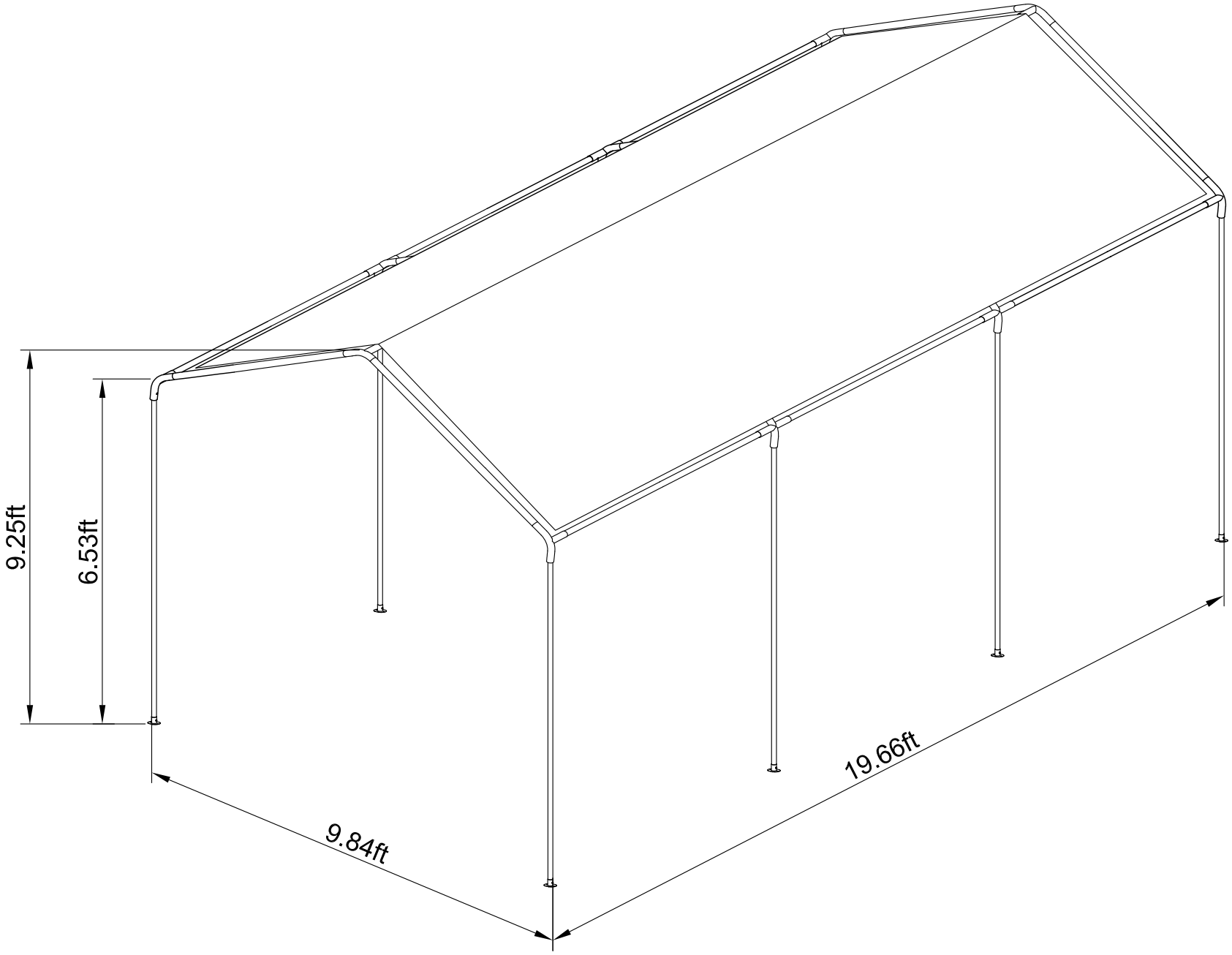
9.25ft
6.53ft
9.84ft
19.66ft

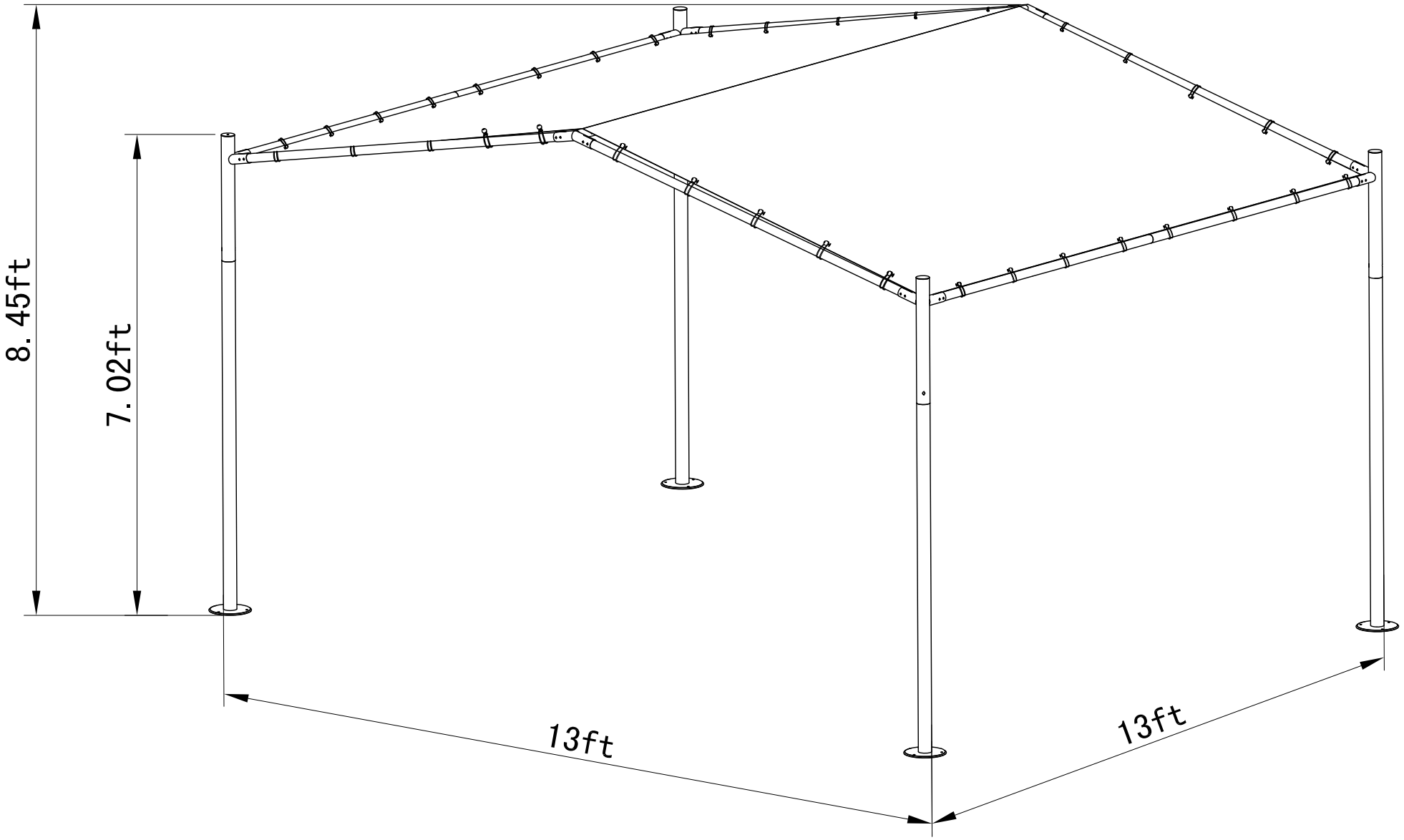
8. 45ft
7. 02ft
13ft
13ft

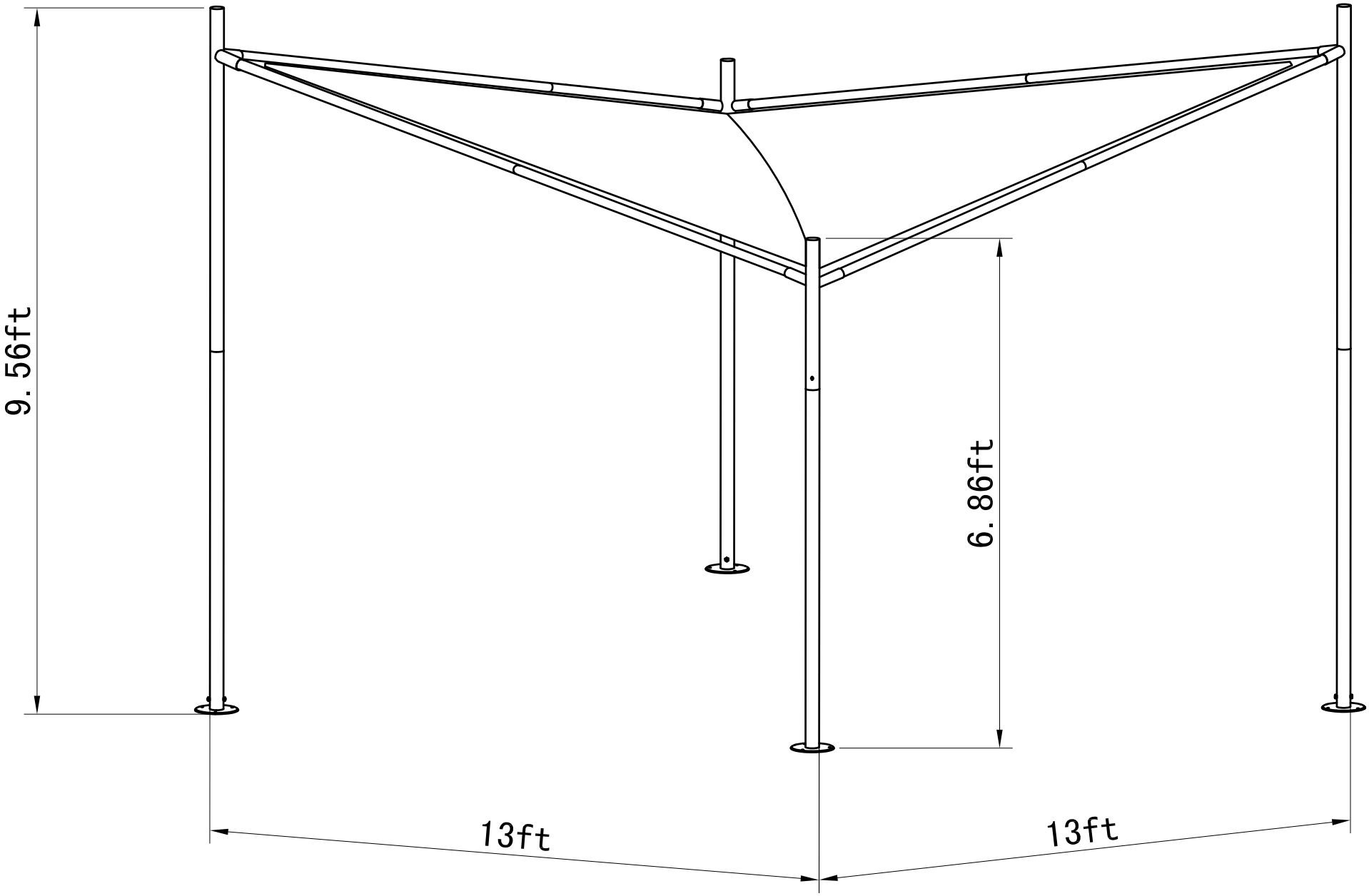
9.56ft
6.86ft
13ft
13ft

9.38ft
6.56ft
10ft
20ft
4.99ft–6.89ft

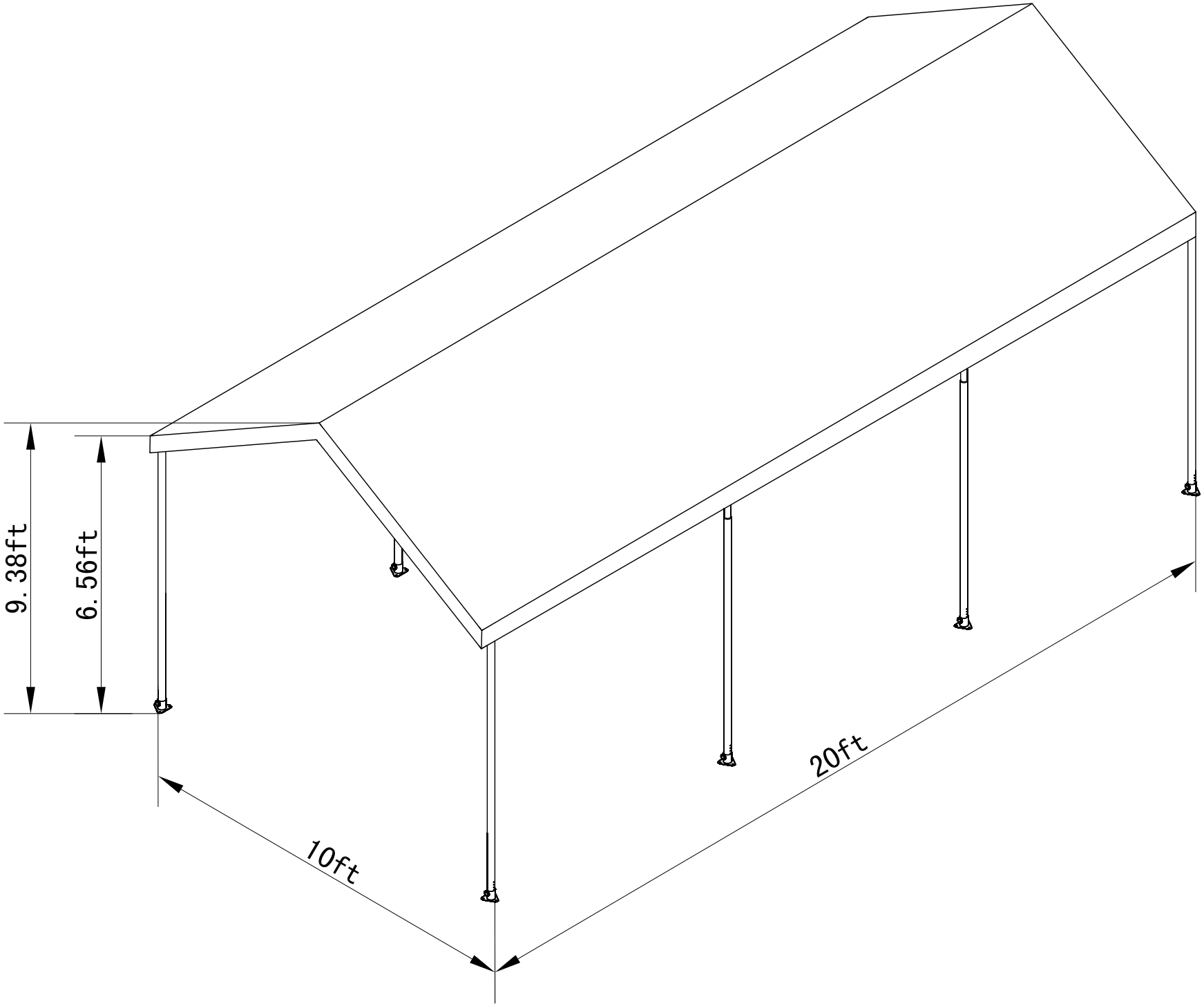
9.38ft
6.56ft
10ft
20ft

9.38ft
6.56ft
10ft
20ft

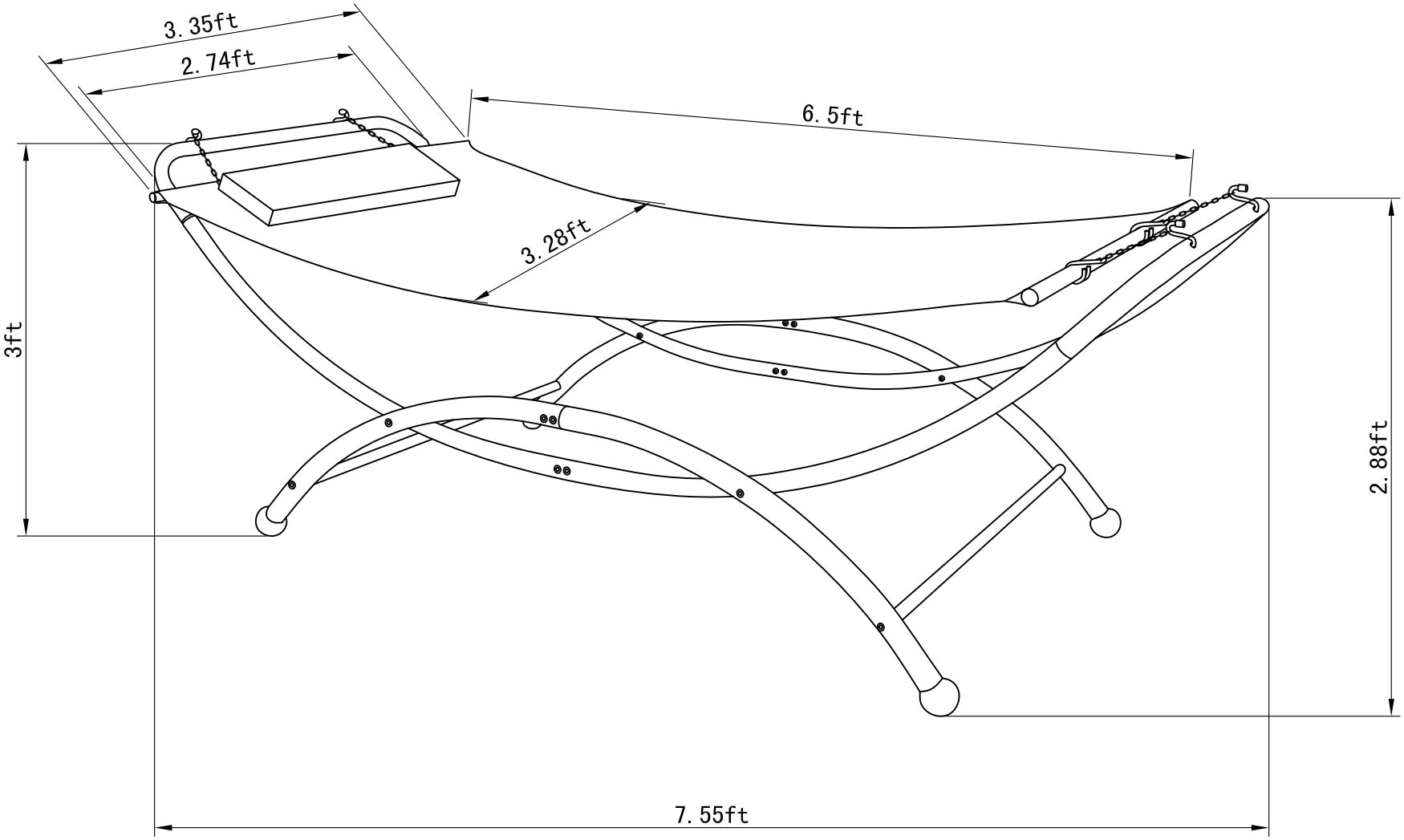
3.35ft
2.74ft
6.5ft
3.28ft
3ft
2.88ft
7.55ft

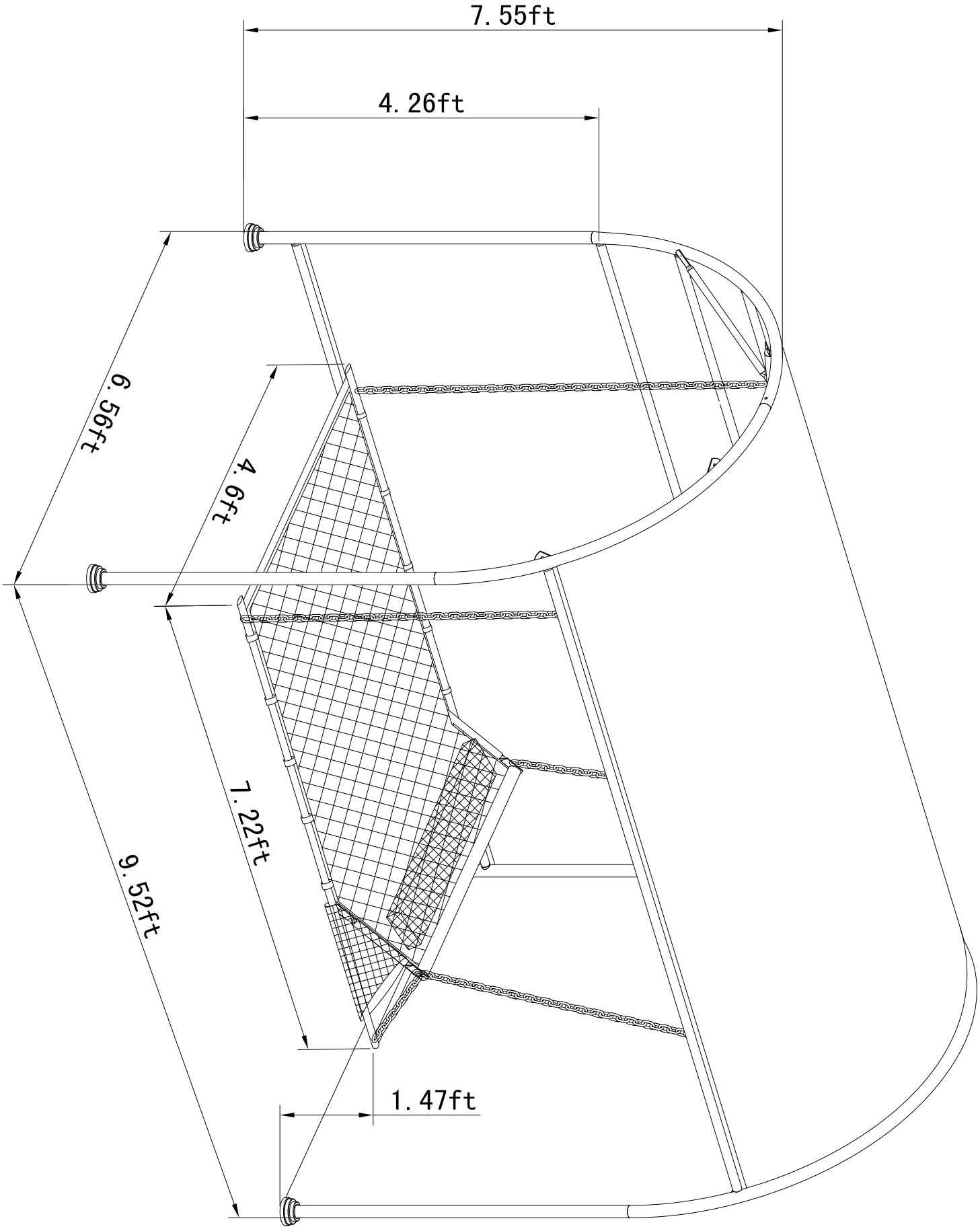
7.55ft
4.26ft
6.56ft
4.6ft
7.22ft
9.52ft
1.47ft

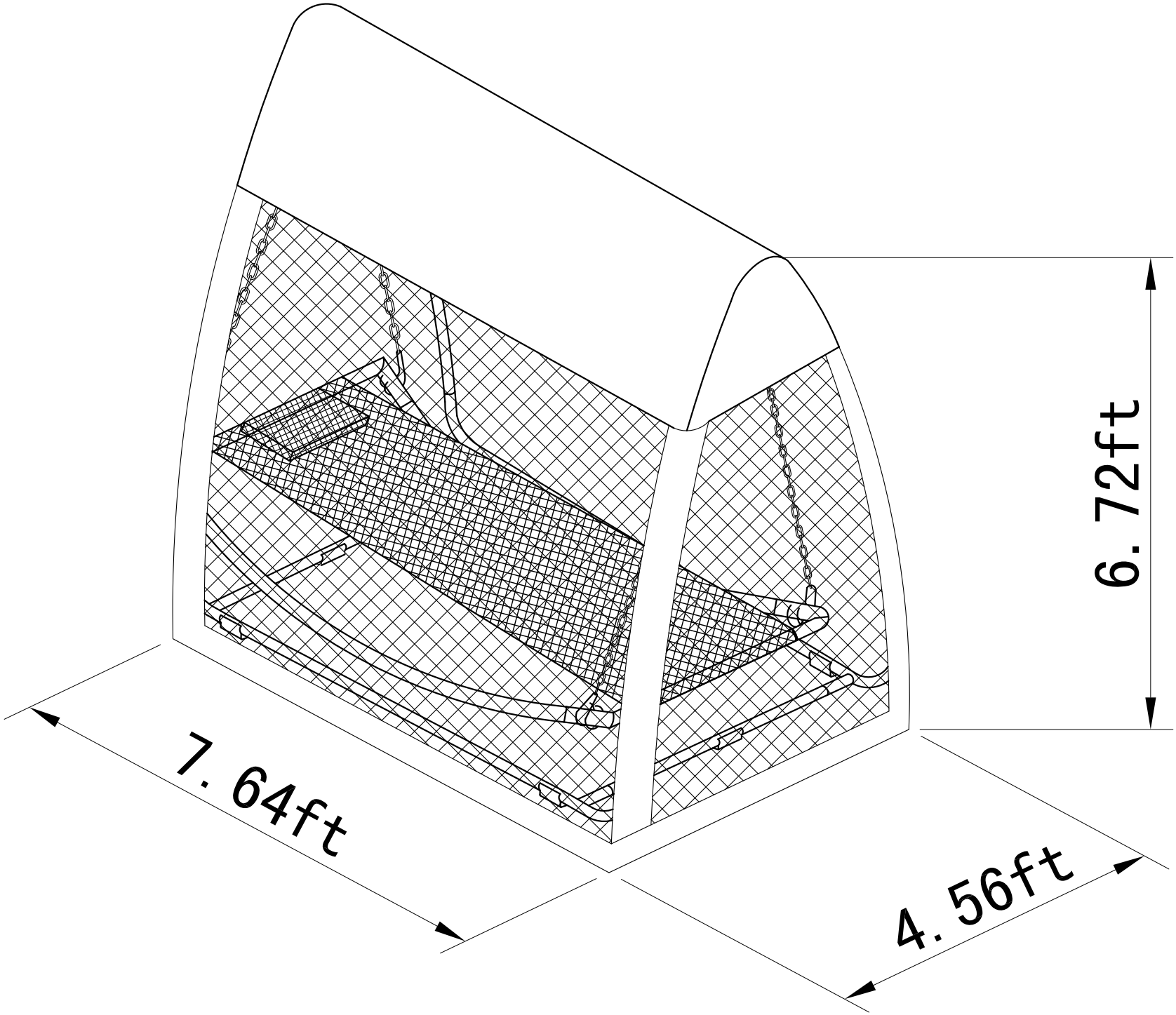
6. 72ft
7. 64ft
4. 56ft

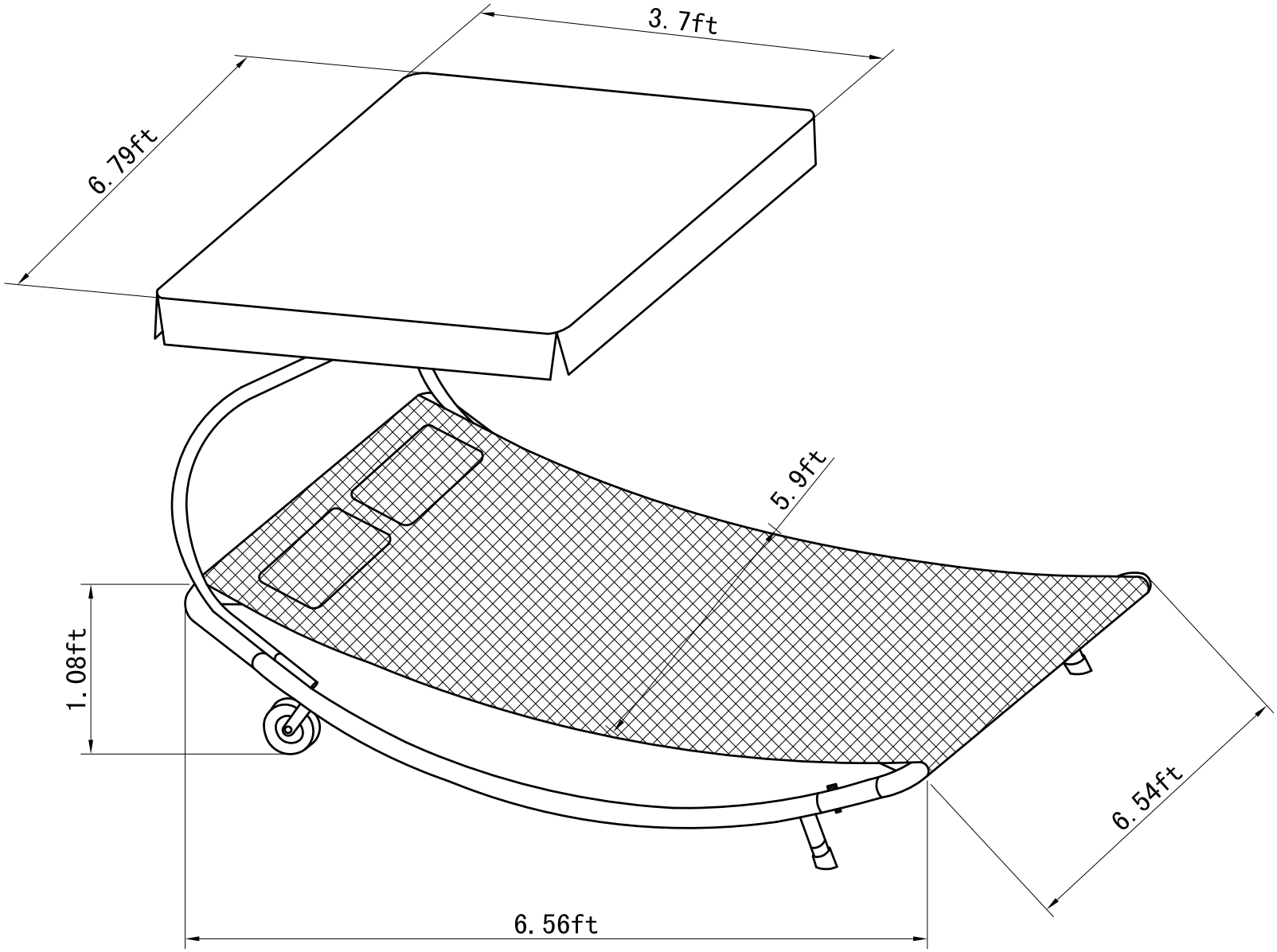
3.7ft
6.79ft
5.9ft
1.08ft
6.54ft
6.56ft